Booster 95 LCW Original As-Built (1974)

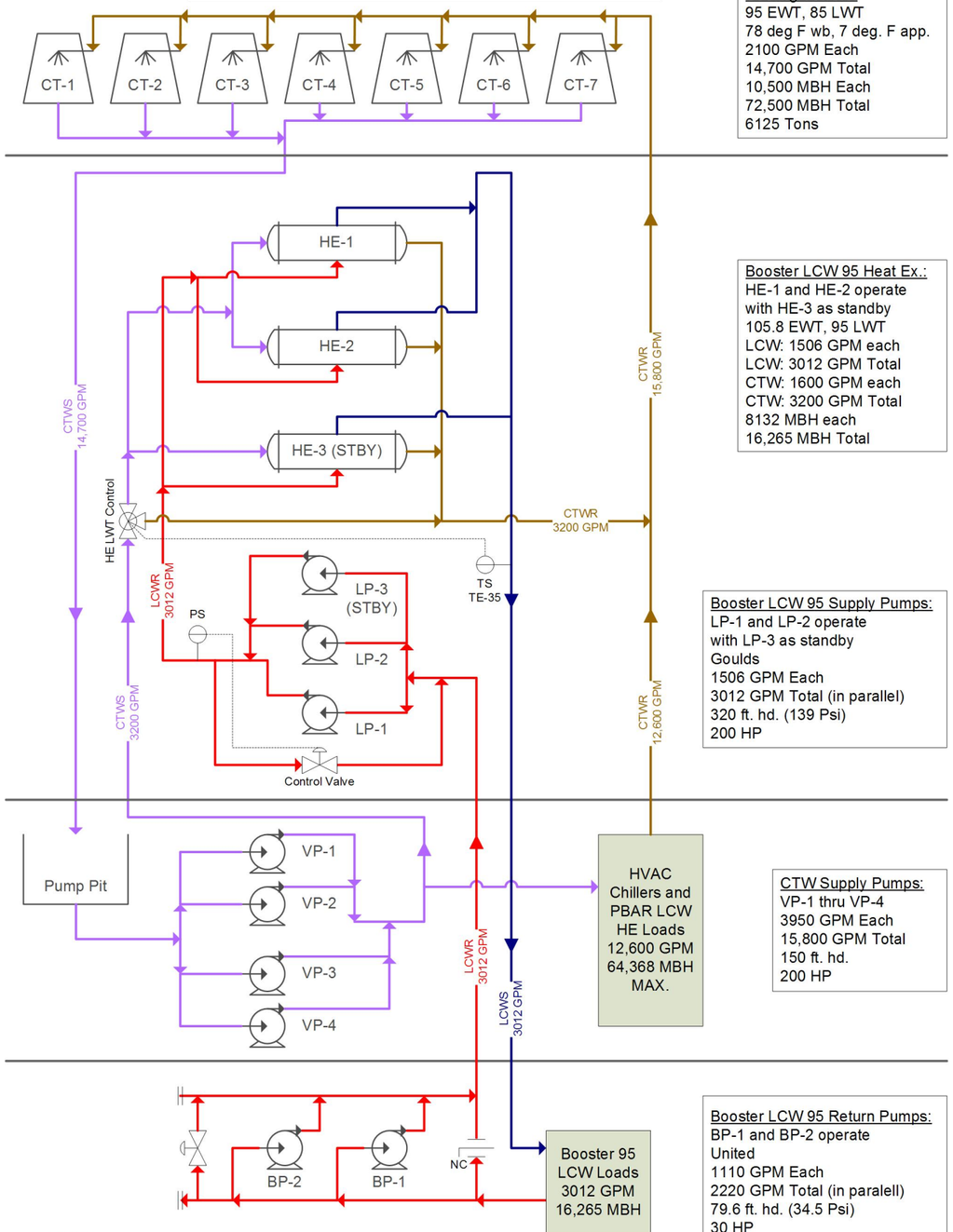

Cooling Towers:
95 EWT, 85 LWT
78 deg F wb, 7 deg. F app.
2100 GPM Each
14,700 GPM Total
10,500 MBH Each
72,500 MBH Total
6125 Tons

Booster LCW 95 Heat Ex.:
HE-1 and HE-2 operate
with HE-3 as standby
105.8 EWT, 95 LWT
LCW: 1506 GPM each
LCW: 3012 GPM Total
CTW: 1600 GPM each
CTW: 3200 GPM Total
8132 MBH each
16,265 MBH Total

Booster LCW 95 Supply Pumps:
LP-1 and LP-2 operate
with LP-3 as standby
Goulds
1506 GPM Each
3012 GPM Total (in parallel)
320 ft. hd. (139 Psi)
200 HP

CTW Supply Pumps:
VP-1 thru VP-4
3950 GPM Each
15,800 GPM Total
150 ft. hd.
200 HP

Booster LCW 95 Return Pumps:
BP-1 and BP-2 operate
United
1110 GPM Each
2220 GPM Total (in paralell)
79.6 ft. hd. (34.5 Psi)
30 HP
Added sometime shortly after
1974 As-Built Drawings created

Notes:
Equipment designations per DUSAF drawings
Capacities, flow values, etc. per design drawings

Booster 95 LCW Current Arrangement (2009)

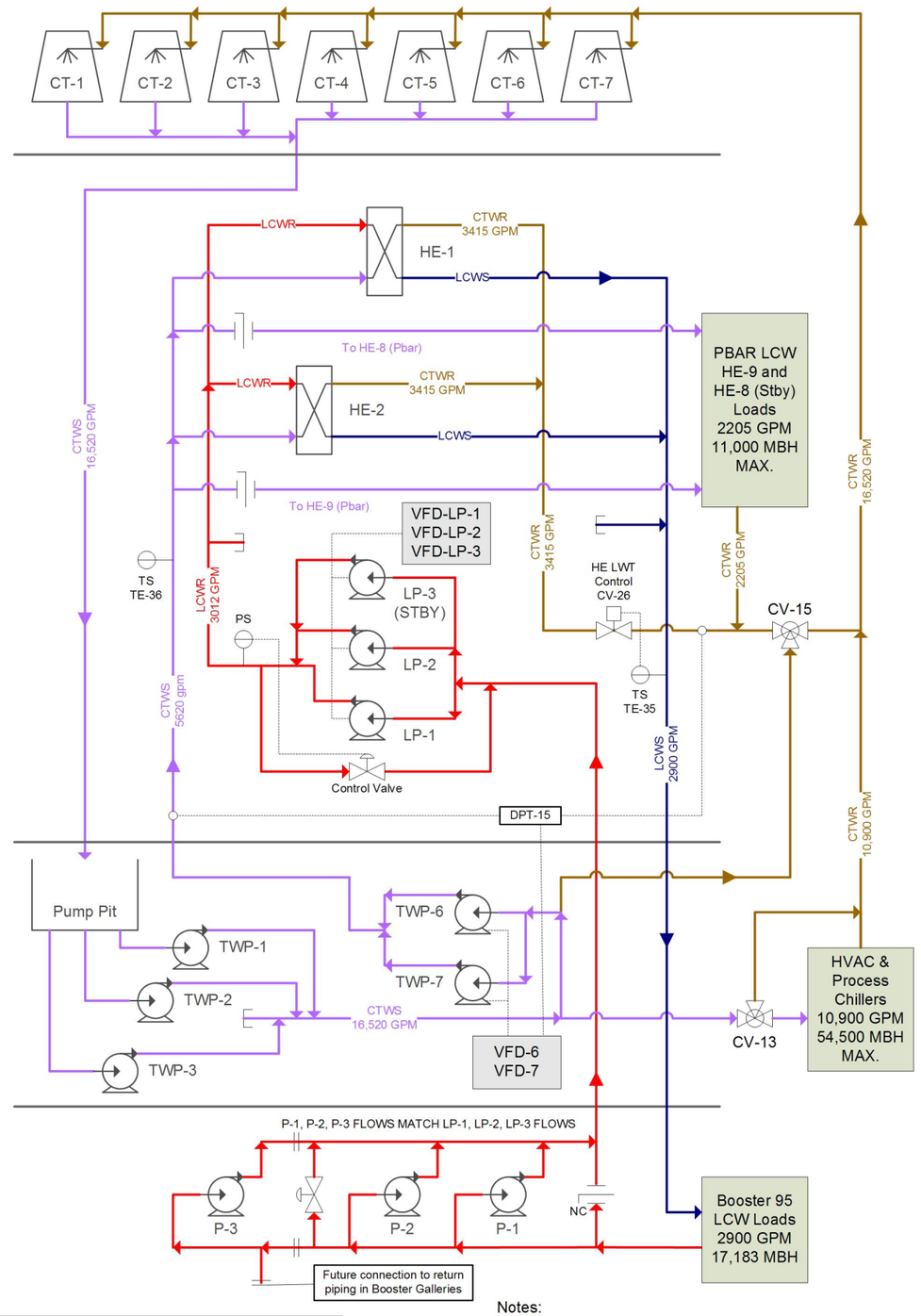

Cooling Towers:
Replaced in 2002
FESS 11-2-48
95 EWT, 85 LWT
78 deg F wb, 7 deg. F app.
2360 GPM Each
16,520 GPM Total
11,800 MBH Each
82,600 MBH Total (24,200 kW)
6883 Tons

Booster LCW 95 Heat Exchangers:
HE-1 and HE-2 replaced in 1999
FESS 11-2-40
HE-1 or HE-2 operate
99.85 EWT, 88 LWT
LCW: 2900 GPM each
CTW: 3415 GPM each
17,183 MBH each (5,035 kW)

HE-3 Removed

Booster LCW 95 Supply Pumps:
LP-1 and LP-2 operate
with LP-3 as standby
Goulds
1680 GPM Each
3360 GPM Total (in parallel)
310 ft. hd. (134 Psi)
200 HP
Most likely, VFDs or Control
Valve limit total flow to 3100 to
3200 GPM (3160 GPM)

CTW Supply Pumps:
TWP-1 and TWP-2 operate
with TWP-3 as standby
Aurora
8260 GPM Each
16,520 GPM Total
115 ft. hd.
300 HP

CTW LCW HE Supply Pumps:
TWP-6 or TWP-7 operates
With (1) as standby
Aurora
5620 GPM
115 ft. hd.
200 HP

Booster LCW 95 Return Pumps:
Both P-1 and P-2 operate
United
1110 GPM Each
2220 GPM Total (in parallel)
79.6 ft. hd. (34.5 Psi)
30 HP
Actual flow is 3100 to 3200 GPM

P-3 added in 2001, FESS 11-2-52
P-3 is backup to P-1 & P-2
Goulds
1506 GPM (1110 GPM ?)
78 ft. hd.
30 HP

Notes:
Equipment designations per FERMI & DUSAF drawings
Capacities, flow values, etc. per design drawings

Booster 95 LCW Water System in the CUB