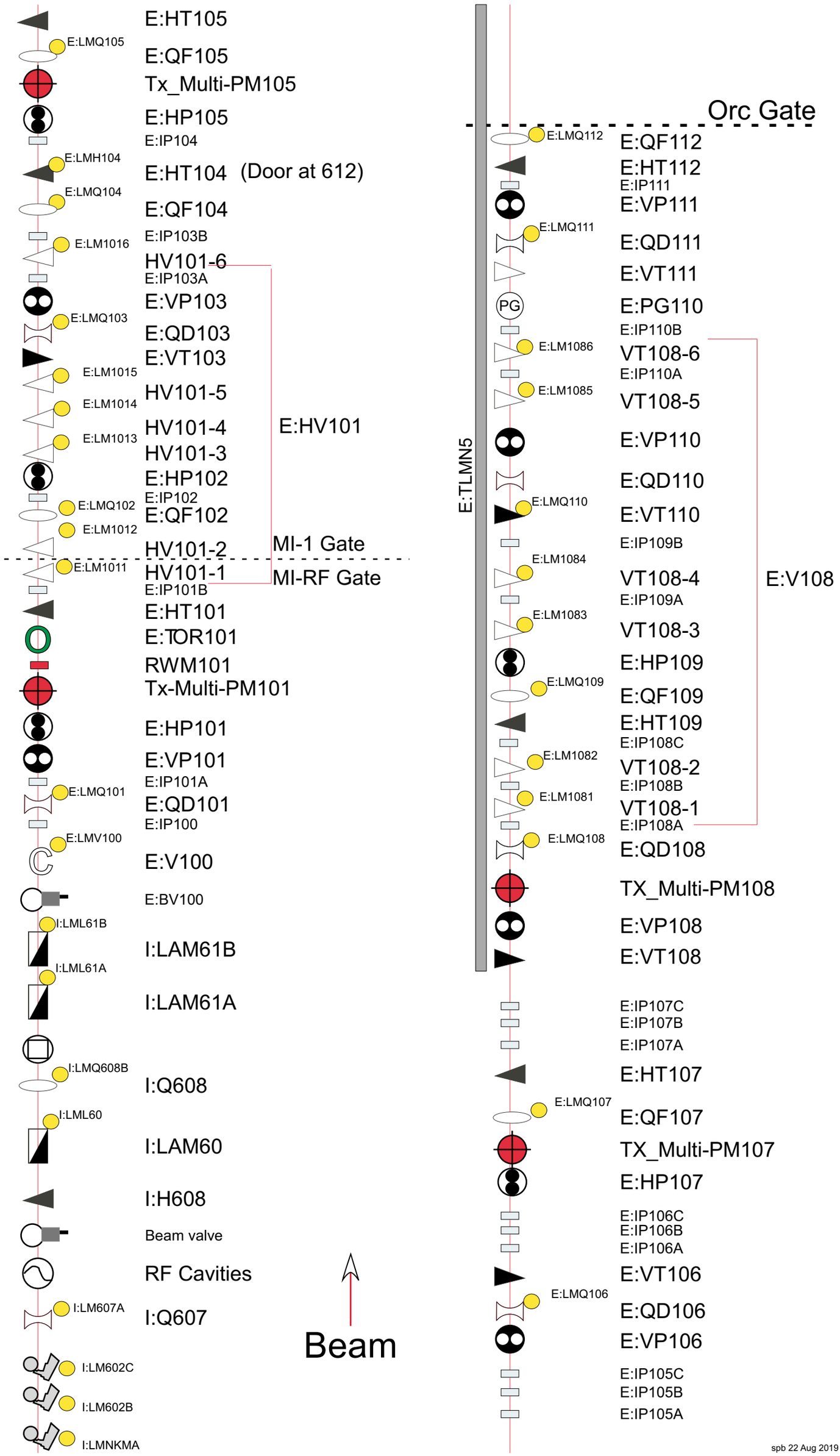
E:HT105
E:LMQ105
E:QF105
Tx_Multi-PM105
E:HP105
E:IP104
E:LMH104
E:HT104 (Door at 612)
E:LMQ104
E:QF104
E:IP103B
E:LM1016
HV101-6
E:IP103A
E:VP103
E:LMQ103
E:QD103
E:VT103
E:LM1015
HV101-5
E:LM1014
HV101-4
E:HV101
E:LM1013
HV101-3
E:HP102
E:IP102
E:LMQ102
E:QF102
E:LM1012
HV101-2
MI-1 Gate
E:LM1011
HV101-1
MI-RF Gate
E:IP101B
E:HT101
E:TOR101
RWM101
Tx-Multi-PM101
E:HP101
E:VP101
E:IP101A
E:LMQ101
E:QD101
E:IP100
E:LMV100
E:V100
E:BV100
I:LML61B
I:LAM61B
I:LML61A
I:LAM61A
I:LMQ608B
I:Q608
I:LML60
I:LAM60
I:H608
Beam valve
RF Cavities
I:LM607A
I:Q607
I:LM602C
I:LM602B
I:LMNKMA
Beam
Orc Gate
E:LMQ112
E:QF112
E:HT112
E:IP111
E:VP111
E:LMQ111
E:QD111
E:VT111
PG
E:PG110
E:IP110B
E:LM1086
VT108-6
E:IP110A
E:LM1085
VT108-5
E:VP110
E:TLMN5
E:QD110
E:LMQ110
E:VT110
E:IP109B
E:LM1084
VT108-4
E:V108
E:IP109A
E:LM1083
VT108-3
E:HP109
E:LMQ109
E:QF109
E:HT109
E:IP108C
E:LM1082
VT108-2
E:IP108B
E:LM1081
VT108-1
E:IP108A
E:LMQ108
E:QD108
TX_Multi-PM108
E:VP108
E:VT108
E:IP107C
E:IP107B
E:IP107A
E:HT107
E:LMQ107
E:QF107
TX_Multi-PM107
E:HP107
E:IP106C
E:IP106B
E:IP106A
E:VT106
E:LMQ106
E:QD106
E:VP106
E:IP105C
E:IP105B
E:IP105A
spb 22 Aug 2019

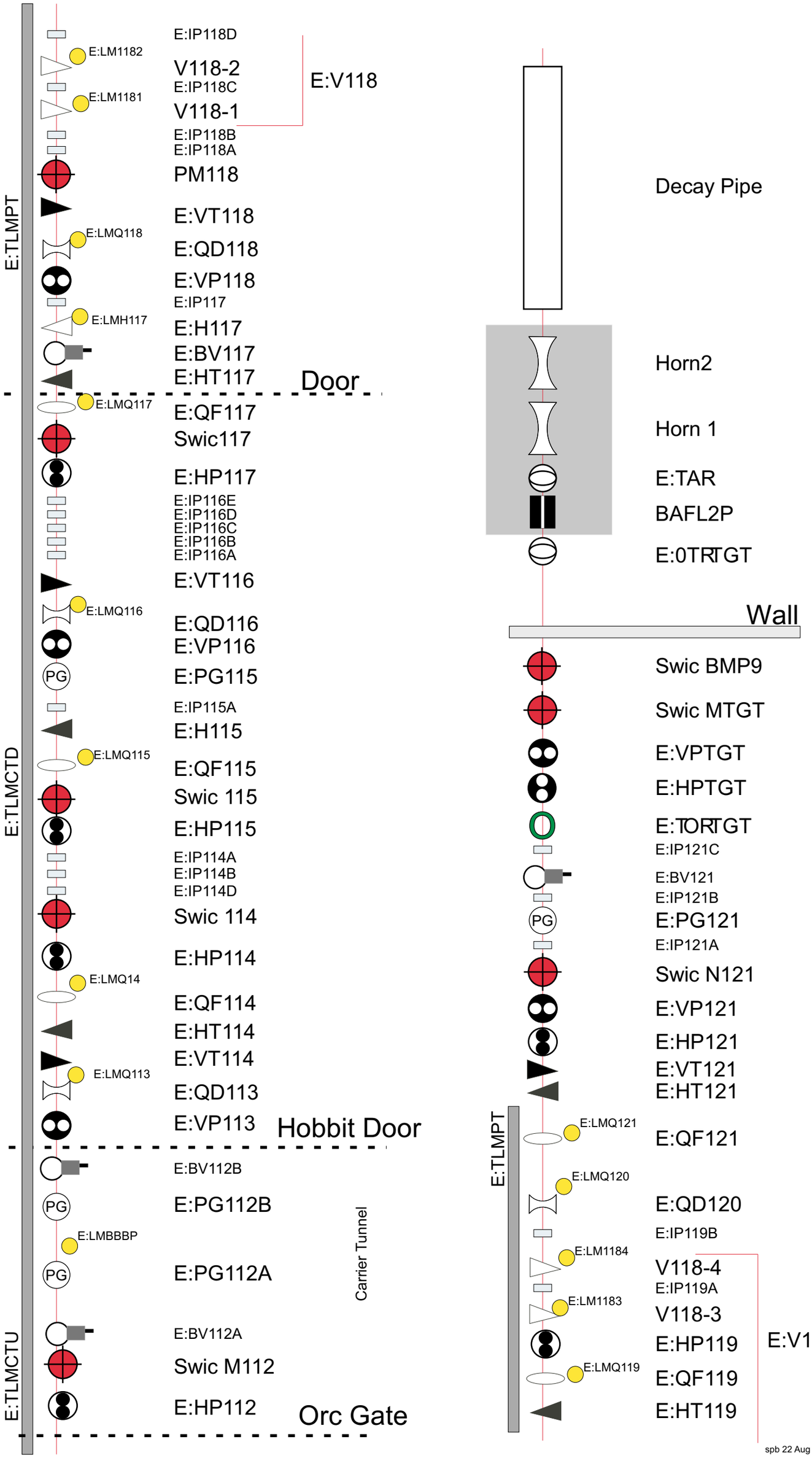
E:TLMPT
E:IP118D
E:LM1182
V118-2
E:IP118C
E:V118
E:LM1181
V118-1
E:IP118B
E:IP118A
PM118
E:VT118
E:LMQ118
E:QD118
E:VP118
E:IP117
E:LMH117
E:H117
E:BV117
E:HT117
Door
E:LMQ117
E:QF117
Swic117
E:HP117
E:IP116E
E:IP116D
E:IP116C
E:IP116B
E:IP116A
E:VT116
E:LMQ116
E:QD116
E:VP116
PG
E:PG115
E:IP115A
E:H115
E:TLMCTD
E:LMQ115
E:QF115
Swic 115
E:HP115
E:IP114A
E:IP114B
E:IP114D
Swic 114
E:HP114
E:LMQ14
E:QF114
E:HT114
E:VT114
E:LMQ113
E:QD113
E:VP113
Hobbit Door
E:BV112B
PG
E:PG112B
E:LMBBBP
PG
E:PG112A
Carrier Tunnel
E:TLMCTU
E:BV112A
Swic M112
E:HP112
Orc Gate
Decay Pipe
Horn2
Horn 1
E:TAR
BAFL2P
E:0TRTGT
Wall
Swic BMP9
Swic MTGT
E:VPTGT
E:HPTGT
E:TORTGT
E:IP121C
E:BV121
E:IP121B
PG
E:PG121
E:IP121A
Swic N121
E:VP121
E:HP121
E:VT121
E:HT121
E:TLMPT
E:LMQ121
E:QF121
E:LMQ120
E:QD120
E:IP119B
E:LM1184
V118-4
E:IP119A
E:LM1183
V118-3
E:HP119
E:V118
E:LMQ119
E:QF119
E:HT119
spb 22 Aug 2019