SIMPLIFIED DIAGRAM OF THE NEW CUB CHW
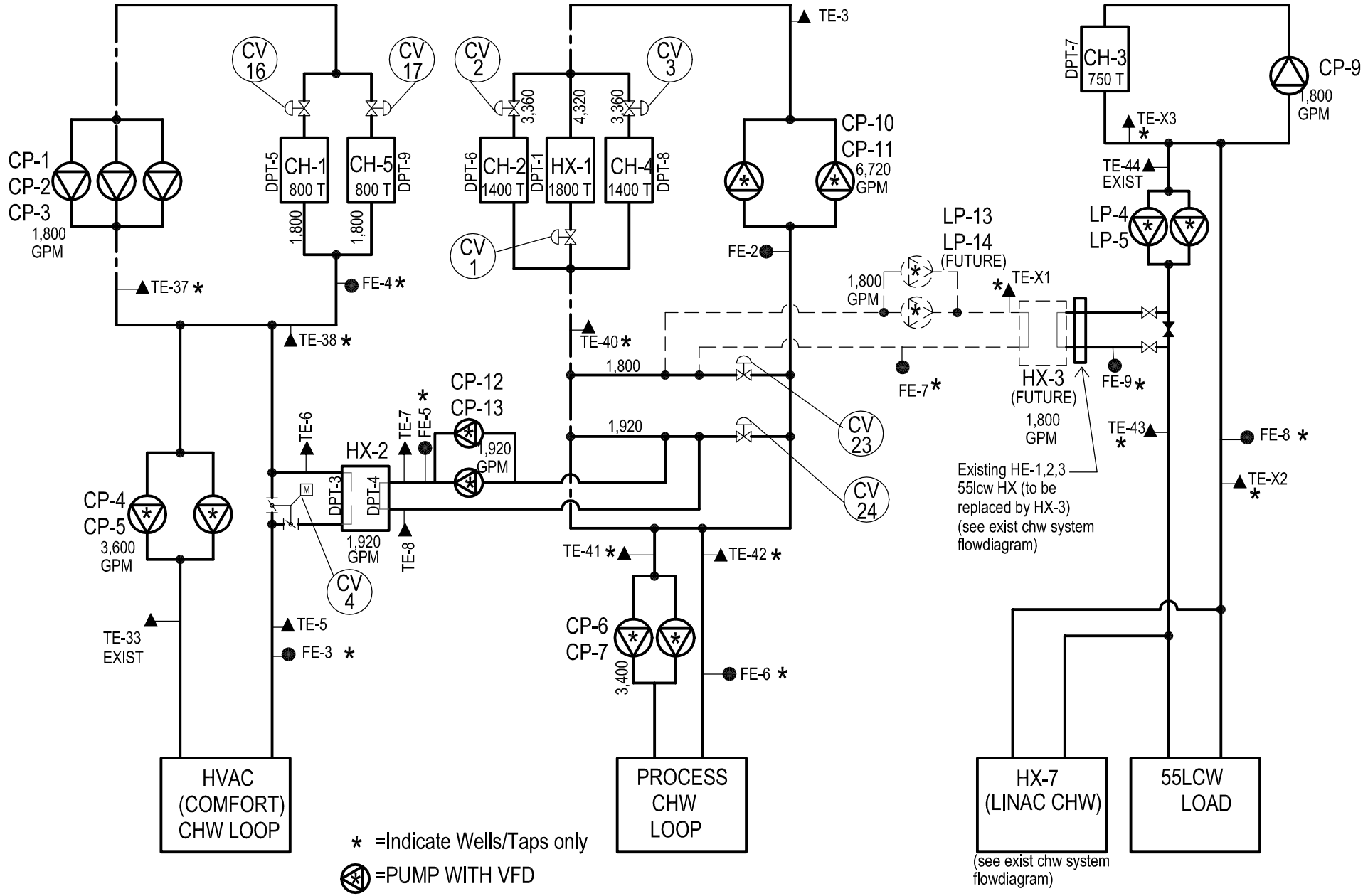
(DETAILS NOT SHOWN, ALL MANUAL VALVES NOT SHOWN)